Anniversary Edition 2018

IMPRESSION

WE ARE URACA.
SINCE 1893.

125 YEARS

Topics

Company

- Editorial 1
- We celebrate 125 years 1
- A journey through the history of URACA ..... 2 – 4
- The year 2018 in pictures 5
- Fair has tradition 6
- URACA acquires DYNAJET 6
- Expansion of production capacity 6

URACA News

- Next exhibitions 6
- Company history..... 6
- New website..... 6

Company

An Outstanding Anniversary

We celebrate 125 Years

In 1893, a small mechanical workshop was founded by the cousins Friedrich Krumm and Gustav Magenwirth. Today, this humble workshop evolved into a privately held world class operation in high pressure equipment. The last 125 years has resulted in tremendous growth through constant innovation and tailored technical solutions for the most challenging applications and customer demands.
The anniversary year was highlighted by a large volume of orders, pushing the limits of URACA's production and assembly capacity. The product portfolio generated a sales of more than € 70 million worldwide, including several major capital projects. Key orders included plunger pumps for carbamate and liquid ammonia for the urea industry in Russia and India, as well as pumps for steel mills and textile industry for cracking processes in China. All pumps were manufactured and delivered on time. Also contributing to the outstanding sales success in our anniversary year are other noteworthy orders included high-pressure cleaning systems with lances and reels for internal tank cleaning, as well as traditional sewer cleaning pumps.
"We focus on top quality, this is URACA's basis for success for 125 years now", summarized Gunter Stöhr, Managing Director of URACA in his speech for the company's anniversary. A promise for the future. Because: "We are URACA - since 1893."



Editorial



Dear Reader

125 years of URACA – A reason for gratitude and celebration.

As we look back on a successful 2018, we wish to thank our customers' for the trust they have shown us based on our capabilities and products. In our anniversary year, projects from all over the world resulted in a record turnover of over €70 million, definitively exceeding our targets in terms of incoming orders and realized sales. Our subsidiaries in China and France offer a regional presence which is required by customers and other parties worldwide. Participation in trade fairs, such as IFAT in Munich and ACHEMA in Frankfurt, also helped by forging international connections and strengthening the URACA brand. In the coming year we will also be present at other global trade fairs. The relaunch of our website also beckons special notice. Available since the beginning of November, our new website allows users to learn about our products, applications, and much more about URACA. We are looking forward to your visit.

By giving the go ahead for the construction of an additional production hall, we are preparing our production capacity for future growth while maintaining our world leading quality standards.

We want to look forward to the coming year together and with confidence... because "We are URACA" – also in the 126th year of our existence.

Thank you very much for your many years of trust in our work! We wish you a Merry Christmas and a happy New Year and all the best and interesting reading.

Gunter Stöhr
Managing Director

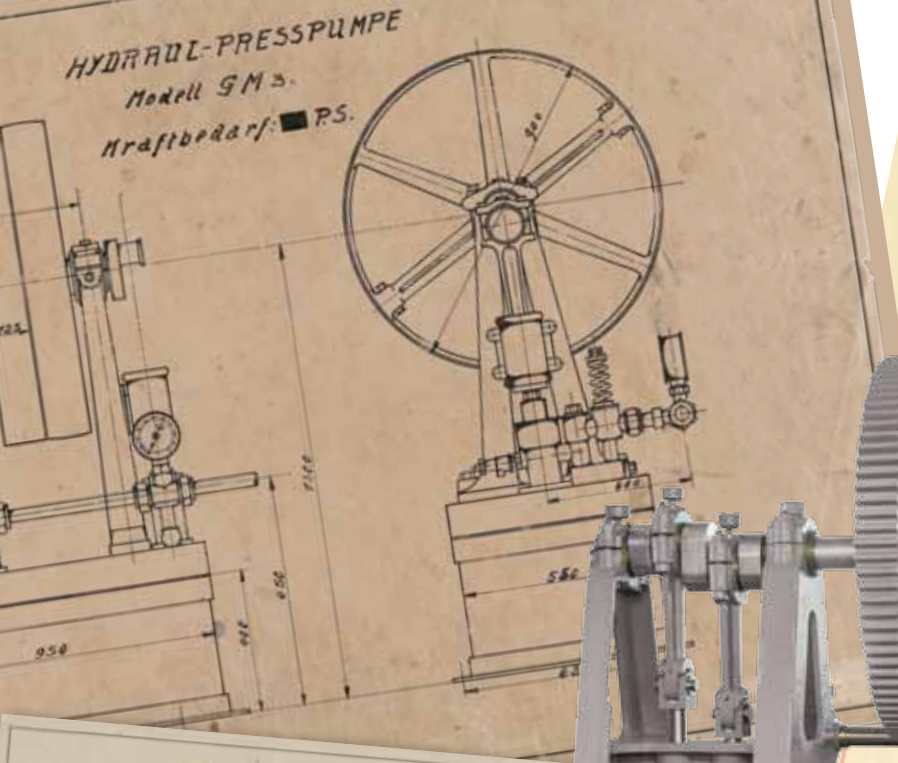

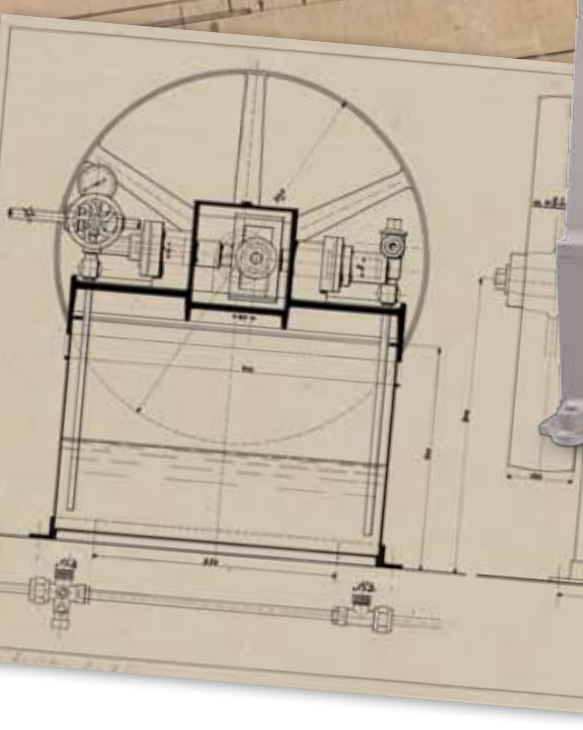

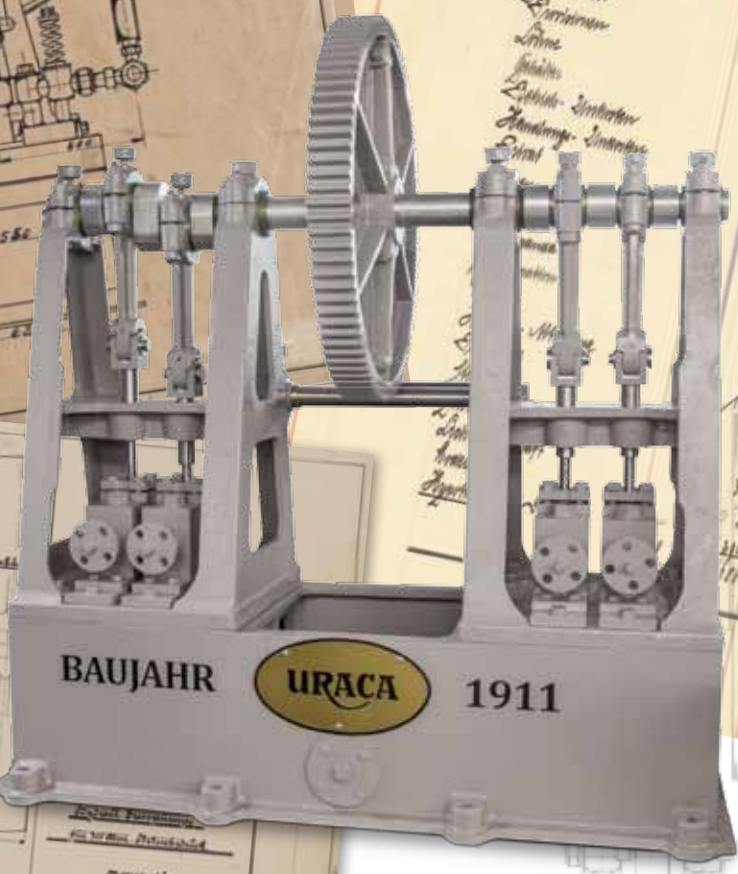

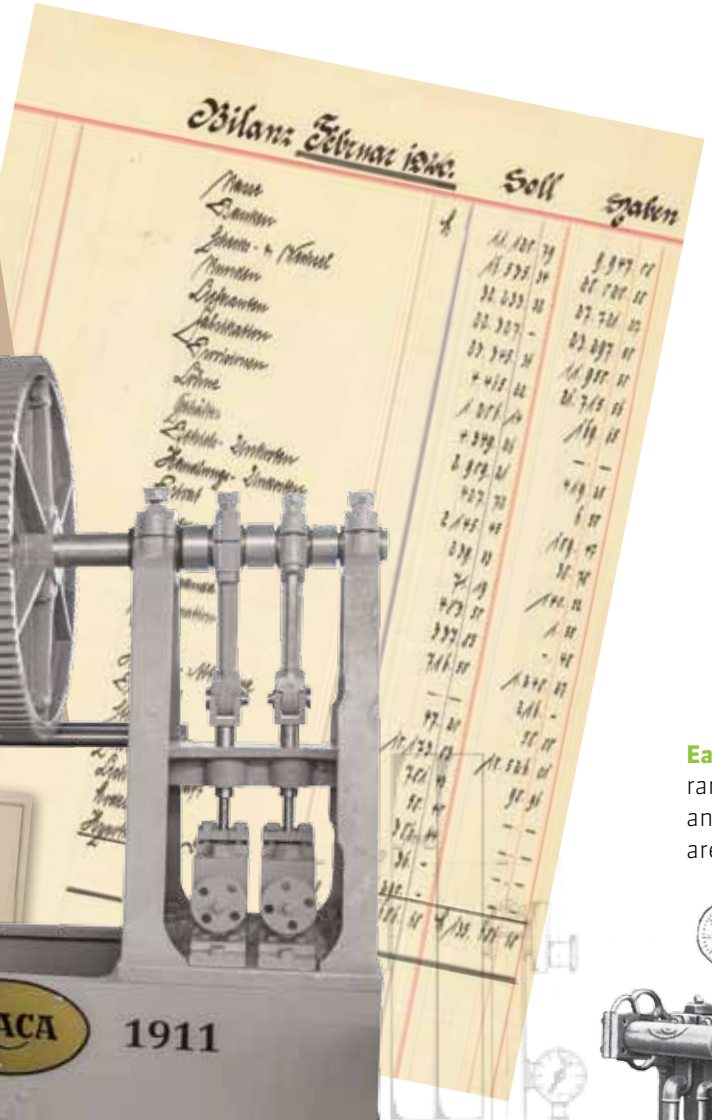



Early 1930s Press pumps ranging from 1 to 3 pistons and up to 3000 atm pressure are available.

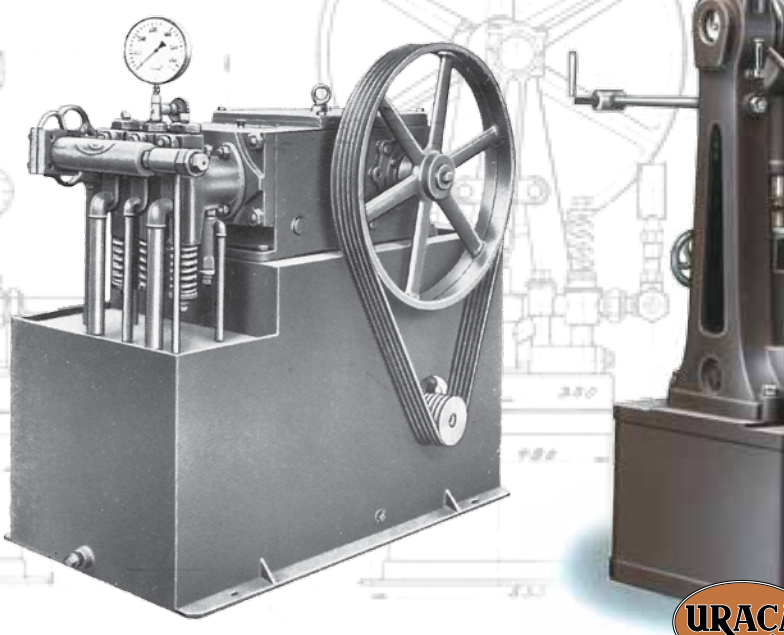

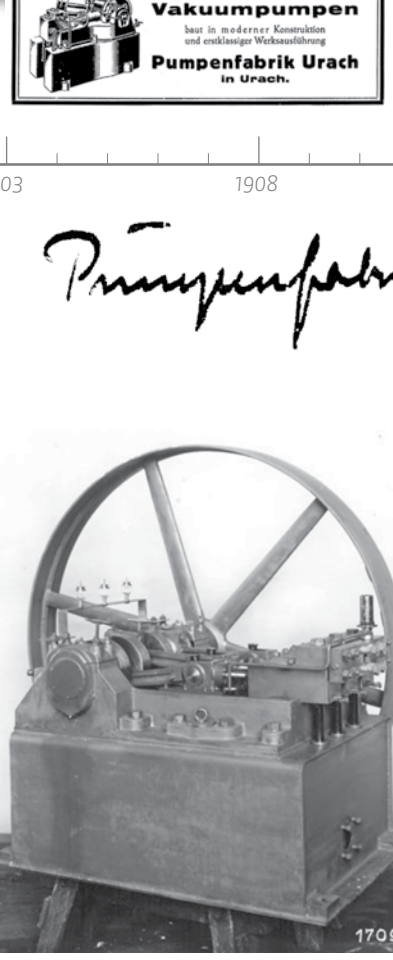



1918 advertisement



Early 1930s A high-pressure air compressor with 10 m³/min. capacity and 300 atm pressure.



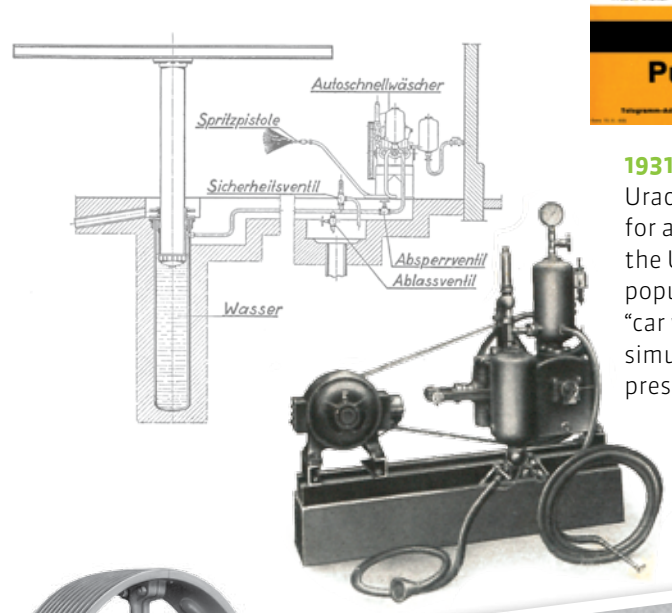

1931 The "Pumpenfabrik Urach" advertises products for auto service under the URACA brand. Very popular: the innovative "car wash" system, which simultaneously supplies pressure to the hydraulic lift.



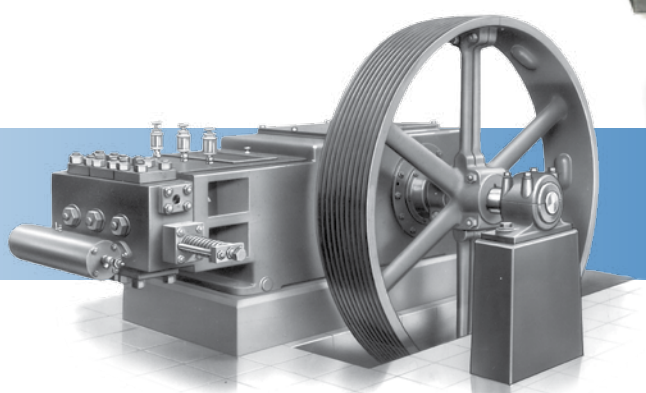



1893 1898 1903 1908 1913 1918 1923 1928 1933

1893 Cousins Friedrich Krumm and Gustav Magenwirth found a small mechanical workshop. A horizontal kerosene engine to drive their machine tools, designed in-house, lays the foundation for the plunger pumps that were to be built later. Innovation and solving technological challenges remain the driving forces behind URACA to this day. "Swabian inventiveness" is reflected in the current product range of the "Pumpenfabrik", the result of URACA's continued search for new applications for high-pressure technology.

Pumpenfabrik Urach

1912 Horizontal test pump with storage tank. Technological advances demanded higher hydraulic performance than was available from pumps built to that point. Suitable drive systems were needed for the increasingly powerful pumps. Gasoline engines and transmission systems, which had been used to this point, were not up to the task and caused problems. A new option presented itself – the electric motor.

1930 Vertical and horizontal plunger pumps have always been at the heart of our business. In the early 1930s, the then “Pumpenfabrik Urach” brought a "single-gun high-pressure car wash pump" onto the market; this small pump unit and its attached spray gun became the basis of today’s offerings for high-pressure cleaning. A whole product branch for automotive-related applications was developed, including compressors, vehicle lifts, and many other products.



1950 With the economic upswing of the 1950s and early 1960s, the product range expanded to include large pumps for the chemical industry as well as high-pressure pumps for sewer cleaning - areas in which URACA is an industry leader to this day.

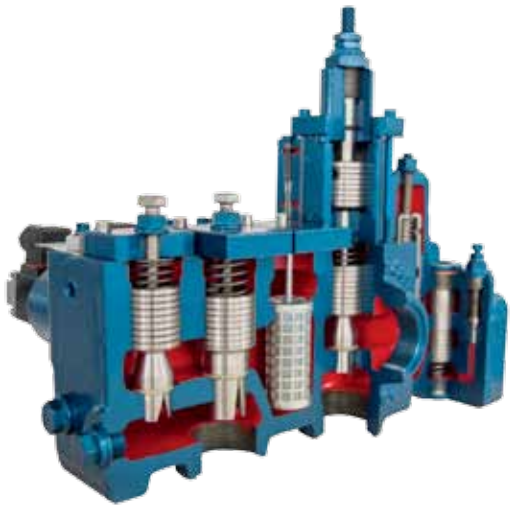

1971 URACA’s elevator control block (model name: FSB) used oil hydraulics and specially developed valves, ensuring smooth starting and stopping of the elevator car. For test purposes, a special elevator was even installed in the factory to simulate all possible operating conditions for a hydraulic elevator.



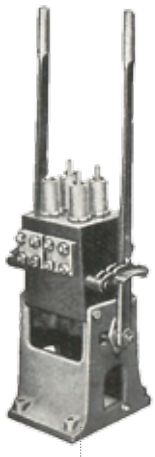

1940 Products for oil hydraulics, such as control blocks for hydraulic elevators, were also part of the product range.



1948 Compressor manufacturing at URACA: From 1925 to the mid-1980s.

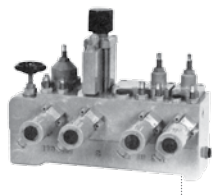



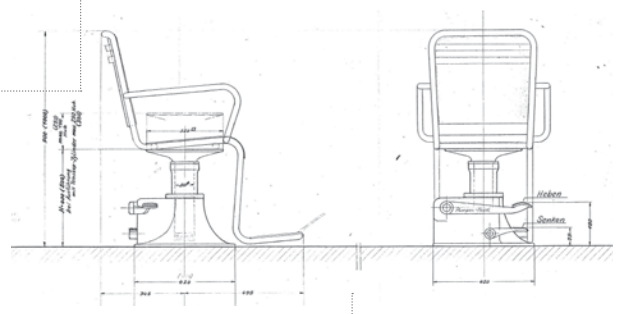

1948 Inventiveness: design for a surgeon’s chair with hydraulic adjustment.



1960 First delivery of sewer cleaning pumps.

1965 URACA’s own rail spur was used to transport large pumps; for example, chemical pumps bound for Shanghai were brought to the port of Hamburg using this connection.



1974 Urach’s speci product for the Ha University Hospit hydraulic operatin for horses.

1938 1943 1948 1953 1958 1963 1968 1973 1978

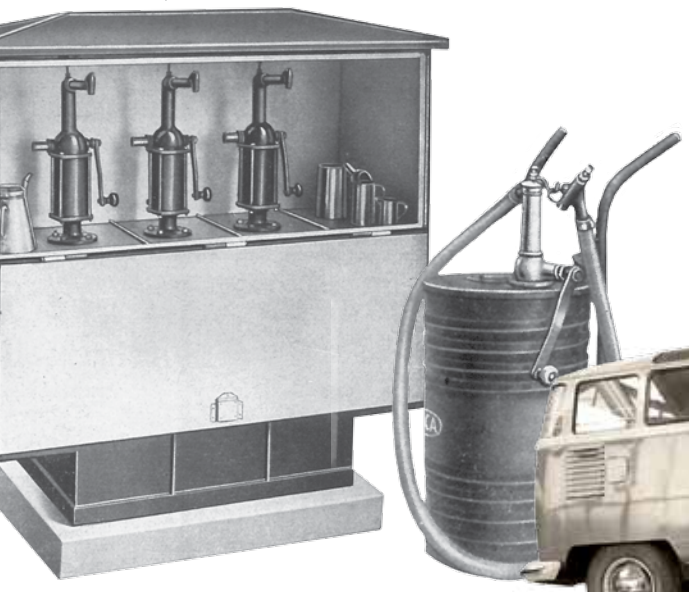

1936 URACA fuel pump.

1937 URACA supplies everything automotive: From grease guns, to oil pumps, to the oil dispenser shown above.

1958 Development of light-weight high pressure pumps for sewer cleaning applications.



1959 A solution built for the rigors of everyday work: URACA Hydrolift hydraulic lifting platforms.



1971 Solutions tailor-made for the customer: since 1971, our demonstration units have been running tests at our customers’ sites.

1973 TWK – The tank cleaning head revolutionized the internal cleaning of tanks, reactors and containers of all kinds.





1979 KD624-G: The new universal pump for high-pressure cleaning.



1962 URACA always solves problems – for example, with this mobile compressor unit, compact and robust for demanding use on construction sites.

1963 The first large pumps designed and built by URACA for pumping liquid ammonia (a liquified gas) and carbamate, an intermediate product in urea production which is corrosive and crystallizes easily.

1972 URACA triplex pumps are the pumps of choice for sewer cleaning. Naturally, the first special-purpose trucks, built in the early 1970s, had these pumps built in.







2013 To meet growing production and logistical demands, offices and nearly all production buildings at the Bad Urach location are rebuilt. Here, over 300 employees develop, manufacture, and install customer-specific solutions with Swabian diligence and high quality standards.



1999 Introduction of the new sewer cleaning pump P3-45.

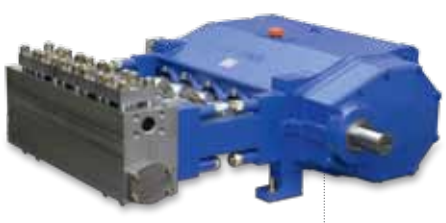

2007 New pumps for industrial applications: now with 4 plungers on the P-70 series.



2016 P3-15 – the new, lightweight pump for sewer cleaning trucks.



1991 Birth of the URACA diaphragm pump with patented T-arrangement.

1985 URACA France is founded



1998 The new industrial pump series P-80 expands the performance spectrum.



2003 The P3-10, a heavyweight among compact pump, expands the lower end of the product range and opens the door to new applications.

2018 Acquisition of DYNAJET.

URACA

1983 1988 1993 1998 2003 2008 2013 2018

1996 New entry and technical center





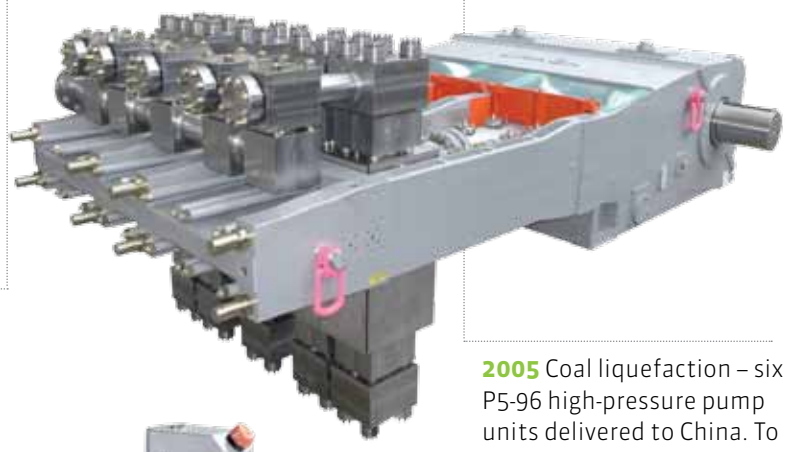

2017 Founding of URACA's Chinese subsidiary – High Pressure Technology (Dalian) Co. Ltd.

2005 Coal liquefaction – six P5-96 high-pressure pump units delivered to China. To this day, the largest order in company history. The pumps supply reactors with coal mash, a mixture of powdered coal and hot oil.

125 YEARS

WE ARE URACA. SINCE 1893.

2018 Today, URACA makes plunger pumps and high-pressure cleaning systems, with pressures up to 3000 bar and power ratings of up to 3500 kW, for virtually every industry, including individual pumps and complete systems.

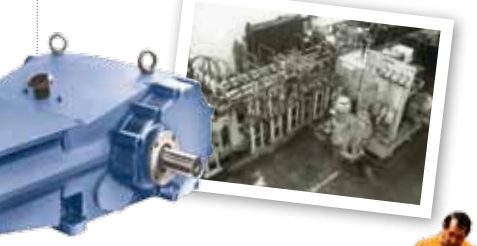

1979/1980 URACA designs and manufactures its first pumps for coal liquefaction. Pioneering spirit, made in Bottrop.



A wide range of valves allows for many solutions using high-pressure technology.



1988 Special solutions for efficient concrete refurbishing – the URACA Vario Jet was designed with customers' needs as the top priority.





2018 Trailered high-pressure cleaning unit with diesel power and hot water capability: JetPower 40 HW, in special anniversary "limited edition" trim.



Company

The year 2018 in pictures


pump units for hot residual oil in final assembly


sewer cleaning pumps ready for shipment


performance test of a pump unit KD825 for the urea industry


TWK “knee” system for reactor cleaning on the test bench




performance test of a KD827 high-pressure slurry pump

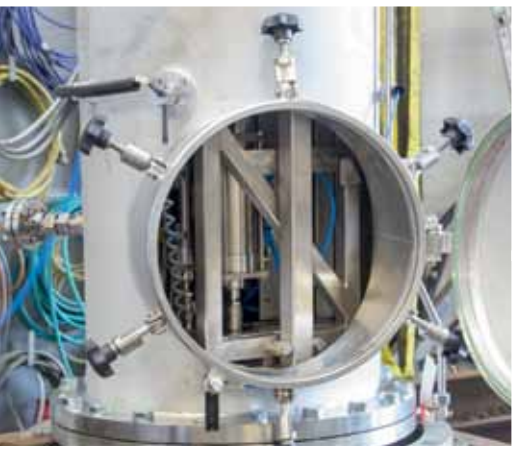




hose reel systems for vessel cleaning, being packed in the shipping department




pump units for hot residual oil in final assembly




high-pressure pump KD827 for liquid ammonia

Company

Trade fairs have a long tradition

In addition to our international presence, two major events shaped our company's trade fair schedule in 2018.

In May, the International Trade Fair for Water, Sewage and Waste Management "IFAT" in Munich drew an audience of industry specialists. The URACA display made our 125th anniversary a focal point: a historic sewer cleaning truck was on display, which drew a crowd and was the subject of many photographs. Visitors were also directed to the current range of URACA sewer cleaning pumps

High pressure pumps from URACA were on display at ACHEMA in Frankfurt, the world's largest trade fair for the chemical engineering, biotechnology, and the process industry. The focus was on extraction of aromas, fats, oils, waxes, polymers, enzymes and dyes using high-pressure CO_2. Specially designed plunger pumps supply supercritical CO_2 in numerous chemical, pharmaceutical and food industry processes. In addition to a typically large industrial pump - in this case a KD628-V for descaling - there were also new high-pressure cleaning products on display. This year marked the 21st time URACA had its products on display at the ACHEMA, an unbroken streak going back to 1958, when it was still known as the "Exhibition for Chemical Apparatus".



Anniversary stand at IFAT with historic sewer cleaning vehicle

ACHEMA 2018 - from process pumps to high-pressure technology



ACHEMA 1972 – even then with a massive pump



Company

URACA acquires DYNAJET

URACA GmbH & Co. KG acquired DYNAJET GmbH on September 24, 2018.



The acquisition further expands URACA's market penetration in the high-pressure cleaning market. DYNAJET, founded in 2001, develops high-pressure water jet cleaning units and accessories for numerous industries and applications. DYNAJET's product range covers pressures from 150 to 3000 bar, with a wide range of applications for customers in construction and renovation, as well as municipalities, cleaning service providers, shipyards, agriculture and forestry. Since 2013, DYNAJET's headquarters have been in Nürtingen, near Stuttgart.

The acquisition is a win-win for both companies: "Our product portfolios complement each other perfectly," says Gunter Stöhr. Together, the two companies set a new standard, with a product range from mobile high-pressure cleaning units from 150 bar up to high-end systems in the ultra-high-pressure range. "We are laying the foundation for continued success in the high-pressure cleaning market," Stöhr continued. URACA and DYNAJET have already been cooperating for some time: DYNAJET naturally uses URACA's high-quality plunger pumps for its high-pressure cleaners.

Gunter Stöhr is confident: "With DYNAJET we are strategically expanding our current product and service portfolio in the professional sector". DYNAJET will remain an independent brand and its employees will continue to develop and manufacture their proven high-pressure water cleaners in Nürtingen.

Our customers will benefit from the combined problem-solving expertise of both companies, explains Andreas Fellmann, Managing Director of DYNAJET optimistically: "URACA gives DYNAJET tremendous potential for innovation and development. This will enable us to offer our customers an expanded product range and new applications."

Next Exhibitions 2019:

Chemtech, Mumbai, IND
February 20-23, 2019

IFAT Eurasia, Istanbul, TR
March 28-30, 2019

bauma, Munich, DE
April 8-14, 2019

RoKaTech, Kassel, DE
May 8-10, 2019

Company

Expansion of production capacity

As a forward-looking company with a focus on quality, URACA values maximum precision and optimal manufacturing conditions. To achieve this, manufacturing facilities are being continuously improved, including a new boring mill. Because the new machines, with their expanded capabilities and complete enclosures require both individual foundations and more space, changes were needed. The solution: an existing building is replaced by a new one. This building not only takes into account current needs, it allows for future expansion of production capacity without the need for further construction, as well as a continued commitment to quality.



News

Company history

Dive into the world of URACA. We are pleased to present you our company history, now available in German. The book is available through specialty retailers under ISBN 978-3-924131-41-8 or directly from URACA.





New website

Since November our new website is online. The website has been completely revised to the most modern design standards, and is available in five languages. Visit us!

Imprint

Publisher:
URACA GmbH & Co. KG
Sirchinger Str. 15
72574 Bad Urach
Phone +49 7125 133-0
info@uraca.com
www.uraca.com

Responsible:
Gunter Stöhr

Editorial:
Anja Goller, Werner Stiefel

Print:
Offizin Scheufele, Stuttgart

Photos:
URACA, ccVision/Atelier Arnold, Claus Arnold, Dynajet

125 YEARS
WE ARE URACA.
SINCE 1893.
www.uraca.com